HC Main Rotor Assembly Two Bearing

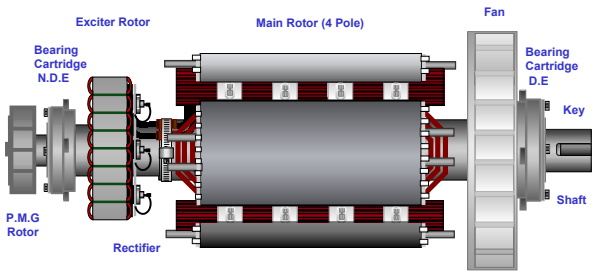

Automatic Voltage Regulator (AVR) Type SA465 P/N E000-24652

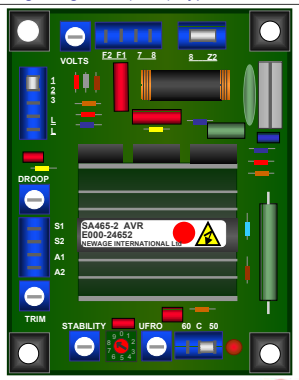

Power Factor Controller (PFC3) with Remote Control Interface (RFI)

Power Factor CONTROL OR CORRECTION with Remote Control Interface

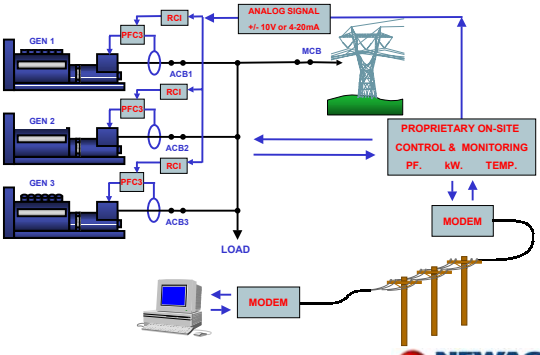

Fault Finding - Testing the Exciter Stator

HC Assembly BC/UC Assembly

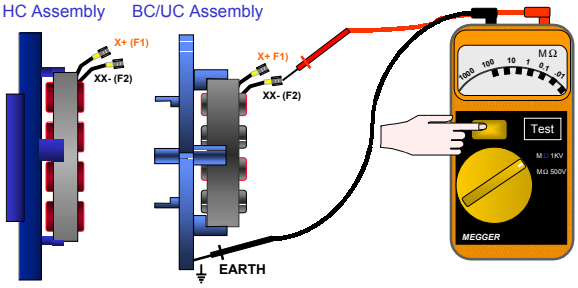

- ✻ 1. Check the Exciter Stator insulation with a 500V or 1000V Insulation tester,
- ✻ 2.The MINIMUM insulation value should be 1.0 Megohm to Earth (Ground).
- ✻ 3. Below 1 Megohm,The windings should be cleaned,dried, and re- coated with anti-track varnish.

ANTI CONDENSATION HEATERS

CARTRIDGE TYPE HEATING ELEMENT

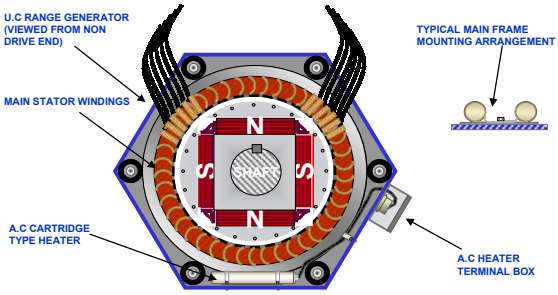

- ✻ FRAME SIZES UC22,UC27, and HC4.
- ✻ Heaters are mounted underneath the main stator windings at the NDE bottom of the frame.
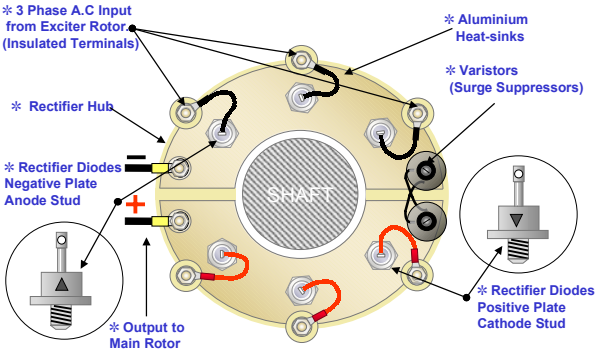
Main Rectifier Assembly- HC & F8 Type